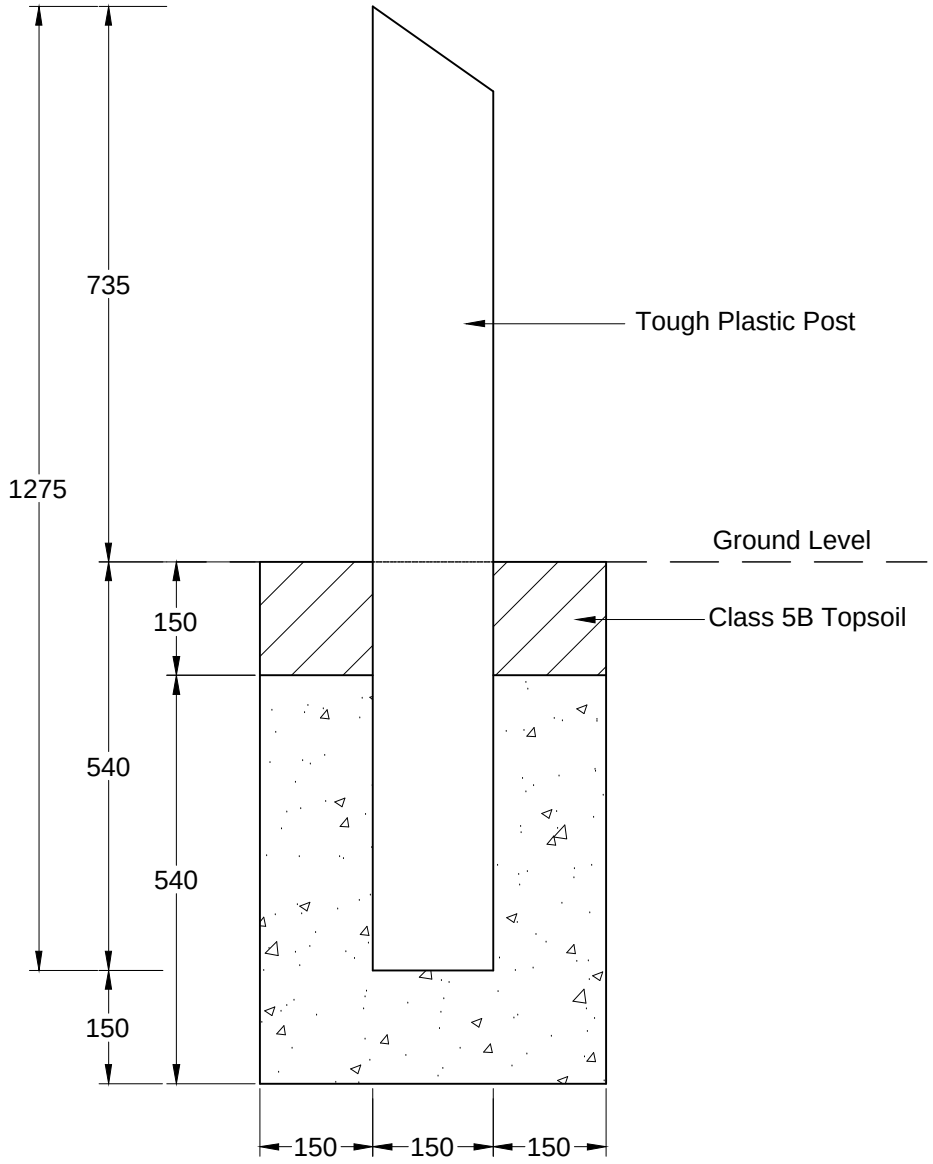

Notes

1. Bottom of post to be set in grade ST3 concrete to clause 2602.
2. Distance from carriageway edge to be 750mm.
3. Verge protection post to be white in colour. 'Edgemaster' design or similar approved.

Rev:	Date:	Description:	Approved by:

AMENDMENT DETAILS

Lincolnshire COUNTY COUNCIL

Checked by:	GP	Approved by:	SB
ISSUED		12/05/17	

Verge Protection Post

This is a typical detail and may require conversion to a full scheme specific drawing.

NOT TO SCALE
(all units in millimetres)

Disclaimer : Before making use of this detail, any designer or third party must ensure that it satisfies all requirements of the scheme to which it is being applied. Lincolnshire County Council accept no responsibility for third party use of this Standard Detail.

SD/3/8
Standard Detail Number

Revision Number

Revision

Hedges, Fencing and Noise Barriers

SD/3/8